DIST	COUNTY	ROUTE	POST MILES TOTAL PROJECT	SHEET No.	TOTAL SHEETS

REGISTERED CIVIL ENGINEER DATE

PLANS APPROVAL DATE

REGISTERED PROFESSIONAL ENGINEER No. Exp. CIVIL STATE OF CALIFORNIA

The State of California or its officers or agents shall not be responsible for the accuracy or completeness of scanned copies of this plan sheet.

The Registered Civil Engineer for the project is responsible for the selection and proper application of the component design and any modifications shown.

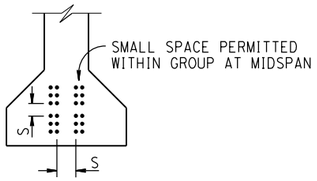

CLEARANCES FOR PRETENSIONED STRANDS

1. Strands may be bundled in groups consisting of 3 vertically, 2 horizontally and separated at the ends
2. The Min distance "S" between groups or individual strands is 1½" for ⅜" ø strands, 1¾" for ½" ø strands, 2" for 0.6" ø strands
3. "S" is measured between centers of adjacent strands
4. Approval by the Engineer is required for deviation

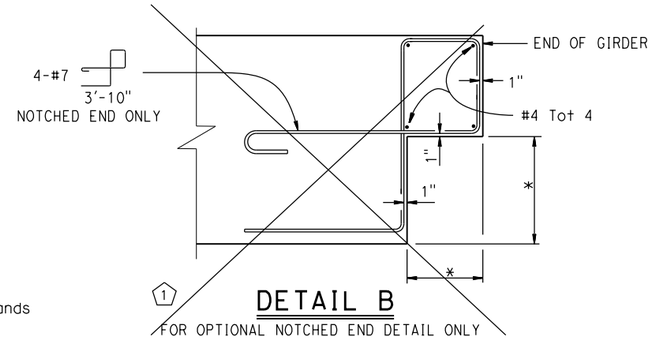

DETAIL B

FOR OPTIONAL NOTCHED END DETAIL ONLY

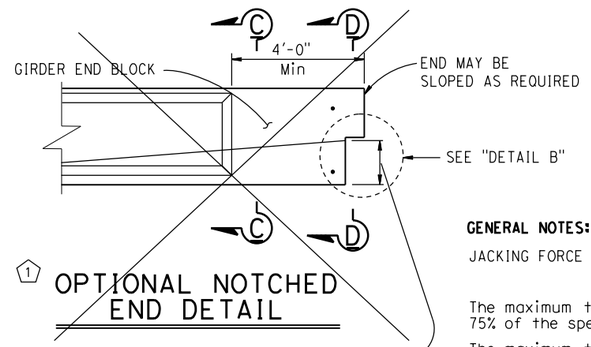

OPTIONAL NOTCHED END DETAIL

GENERAL NOTES:

JACKING FORCE (P):

The maximum tensile stress in the prestressing steel upon release shall not exceed 75% of the specified minimum ultimate tensile strength of the prestressing steel.

The maximum temporary tensile stress (jacking stress) in the prestressing steel shall not exceed 80% of the specified minimum ultimate tensile strength of the prestressing steel.

CONCRETE STRENGTH: f'ci is at time of initial stressing
f'c is at 28 days

DEFLECTION COMPONENTS: Informational - to be used in setting screed line elevations

Screed line elevations for deck concrete will be determined by the Engineer.

Contractor may interpolate "P" and "X" values between limits shown, as approved by the Engineer.

Use epoxy coated reinforcement in Environmental Area III

	Girder location or designation and length	Jacking Force (P) (Kips) "X"		"Y" (in)	Concrete Strength (ksi) f'ci	Concrete Strength (ksi) f'c	Midspan Dead Load Deflection (inches) Deck	Midspan Dead Load Deflection (inches) Rail
2	EXTERIOR 58'-0"	4"	450	12	5	6	0.51	0.04
		6"	480					
2	INTERIOR 58'-0"	4"	400	12	5	6	0.51	0.04
		6"	400					

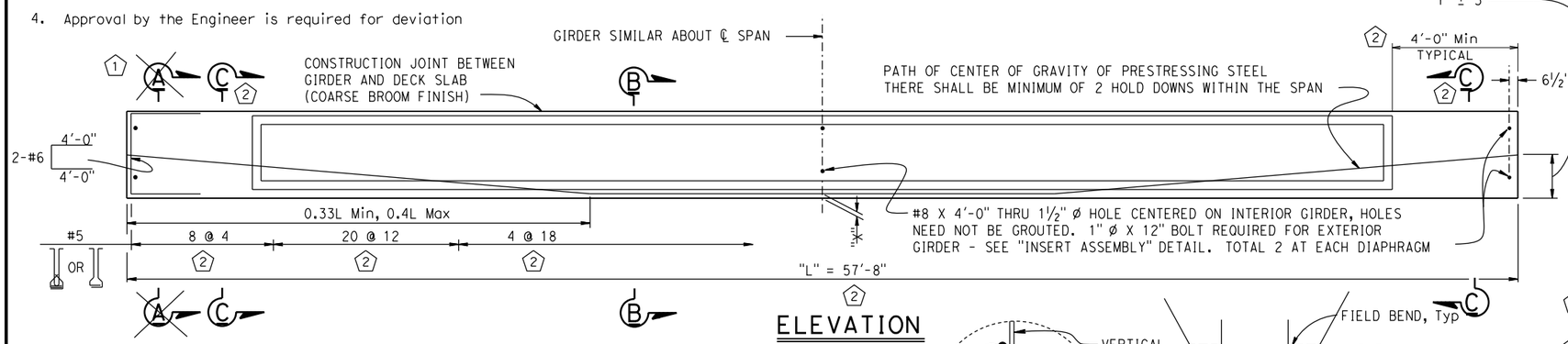

ELEVATION

* ENGINEER TO FILL IN THESE VALUES, THEN DELETE THIS NOTE

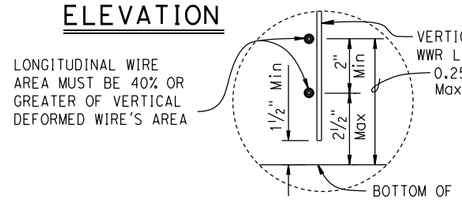

DETAIL A

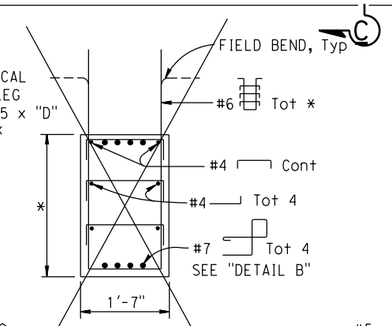

SECTION D-D

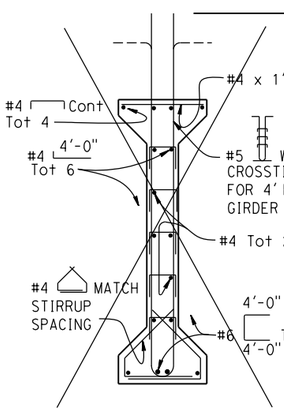

SECTION A-A

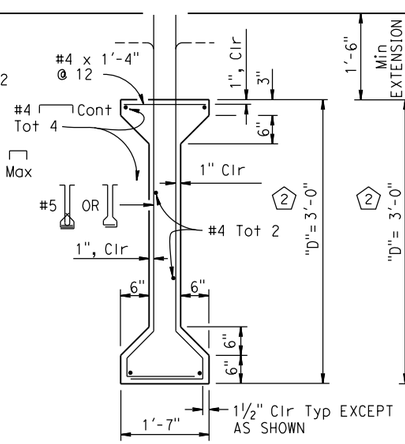

SECTION B-B

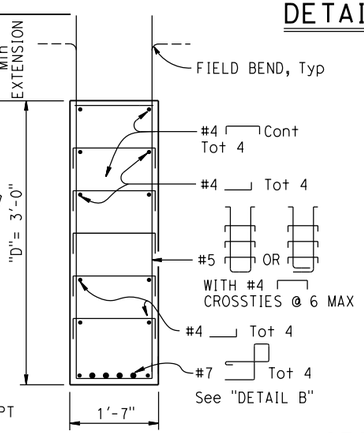

SECTION C-C

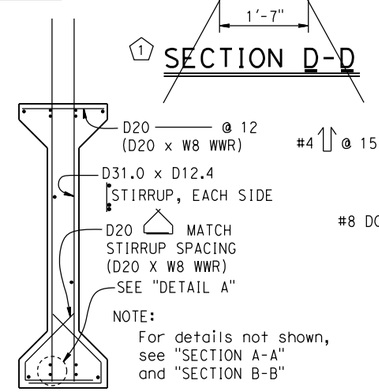

NOTE:
For details not shown, see "SECTION A-A" and "SECTION B-B"

OPTIONAL WELDED WIRE REINFORCEMENT (WWR) DETAIL

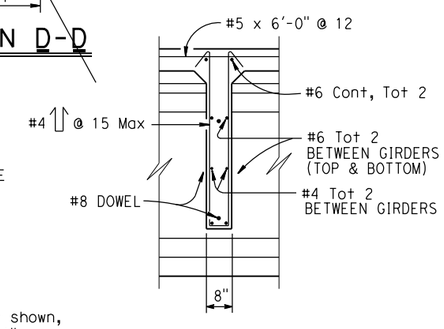

SECTION E-E

WWR NOTE: MANUFACTURER'S SHOP DRAWING SHALL CONFORM TO THE REINFORCEMENT SHOWN ON THIS SHEET AS NOTED AND THE SPECIAL PROVISIONS

#8 X 4'-0" DOWELS PLACED THROUGH 1½" ø HOLES FORMED IN GIRDER, WHEN DIAPHRAGM IS CONTINUOUS HOLES NEED NOT BE GROUTED

1" ø x 12" BOLTS WITH INSERT ASSEMBLIES WHEN DIAPHRAGMS ARE DISCONTINUOUS. BOLTS REQUIRED FOR EXTERIOR GIRDERS

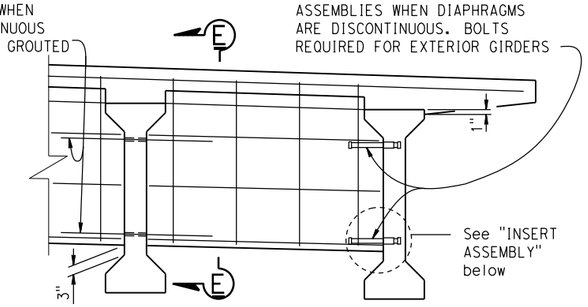

INTERMEDIATE DIAPHRAGM

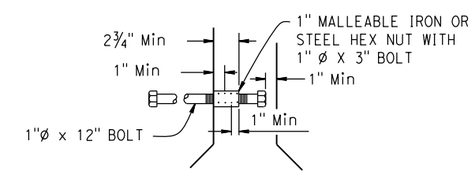

INSERT ASSEMBLY

NO SCALE

BRIDGE STANDARD DETAILS		
xs90-000	July 2016	*The components of the Bridge Standard Details have been prepared under the responsible charge of the Technical Owner, a registered civil engineer in the State of California*
FILE NO.	APPROVAL DATE	

MODIFICATIONS SHOWN:
1 DETAIL REMOVED
2 INFORMATION ADDED

STATE OF CALIFORNIA DEPARTMENT OF TRANSPORTATION

DIVISION OF ENGINEERING SERVICES

BRIDGE NO. __
POST MILE __

SPECIAL DETAILS
XS SHEET EXAMPLE
PRECAST PRESTRESSED I GIRDER

Refer to: http://www.dot.ca.gov/hq/esc/techpubs/manual/bridgemanuals/bridge-standard-detail-sheets/index.html

FILE => $REQUEST
USERNAME => $USER TIME PLOTTED => $TIME DATE PLOTTED => $DATE

ORIGINAL SCALE IN INCHES FOR REDUCED PLANS 0 1 2 3

UNIT: __
PROJECT NUMBER & PHASE: __ CONTRACT NO.: __

DISREGARD PRINTS BEARING EARLIER REVISION DATES

REVISION DATES SHEET OF