DIST	COUNTY	ROUTE	POST MILES TOTAL PROJECT	SHEET No.	TOTAL SHEETS

REGISTERED CIVIL ENGINEER DATE

PLANS APPROVAL DATE

REGISTERED PROFESSIONAL ENGINEER No. Exp. CIVIL STATE OF CALIFORNIA

The State of California or its officers or agents shall not be responsible for the accuracy or completeness of scanned copies of this plan sheet.

The Registered Civil Engineer for the project is responsible for the selection and proper application of the component design and any modifications shown.

NOTES:

1. Use cover plate for channel assembly access.
2. Strip seal joint seal assembly (SSJSA). Maximum non-seismic demand MR = 4". Strip seal must have a minimum movement rating of 4 inches, manufactured specifically for highway bridges. The neoprene gland of strip seal assembly must be one continuous piece. No field splice shall be permitted.
3. Apply a ⅜" of Multilayer Polymer Concrete Overlay to deck plate at the shop.
4. Self-consolidating concrete shall be used in joint blockout.
5. Top of Multilayer Polymer Concrete Overlay, polyester and SCC concrete must match top of deck profile.
6. For deck plate details see " DECK PLATE DETAILS No. 1" and " DECK PLATE DETAILS No. 2" sheets for TYPE I joint.
7. For reinforcement in blockout areas, see "REINFORCEMENT DETAILS" sheet for TYPE I joint. Not all reinforcement is shown for clarity.
8. For channel assembly details, see "CHANNEL ASSEMBLY DETAILS No. 1" and "CHANNEL ASSEMBLY DETAILS No. 2" for TYPE I joint.
9. For support plate details see "SUPPORT PLATE DETAILS" sheet for TYPE I joint.
10. For construction sequence see "CONSTRUCTION SEQUENCE" sheet for type I joint.

JOINT INFORMATION (MAXIMUM NON-SEISMIC MR ≤ 4")

LOCATION					
SKEW (°)					
DECK PLATE	Thickness Td (in)				
	Length Ld (in)				
SUPPORT PLATE	Thickness Ts (in)	¾	¾	¾	¾
	Length Ls (in)				
COVER PLATE	Thickness Tc (in)				
	Length Lc (in)	19	19	19	19
JOINT OPENING @ 70 °F	a_{70} (in)				
BLOCKOUT	B1 (in)				
	B2 (in)				
	D1 (in)				
	D2 (in)				
TEMP. DROP/RISE	(in)/(in)				
SEE (SEISMIC) CLOSING/OPENING	(in)/(in)				
CREEP & SHRINKAGE	(in)				

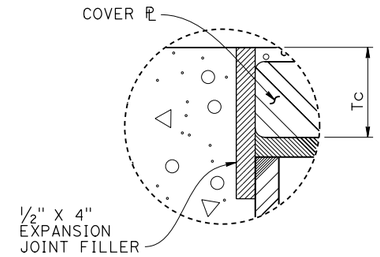

DETAIL W
6" = 1'-0"

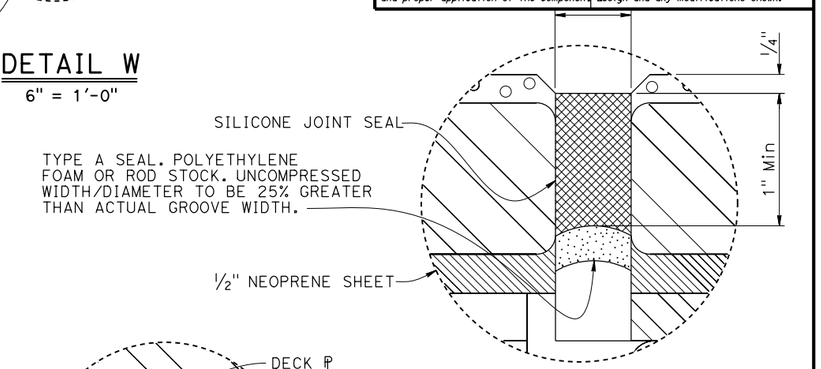

DETAIL H
1' = 1'

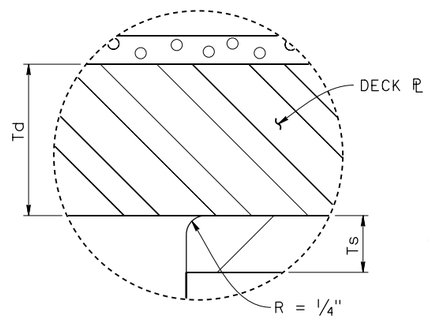

DETAIL B
1' = 1'

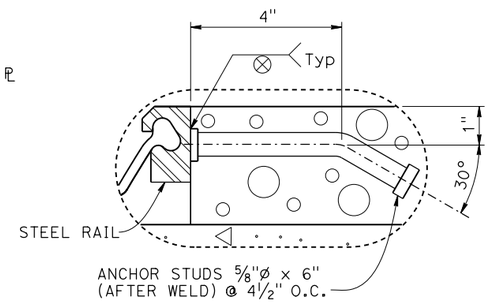

DETAIL C
6" = 1'-0"

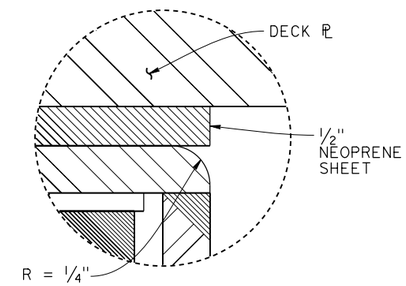

DETAIL G
1' = 1'

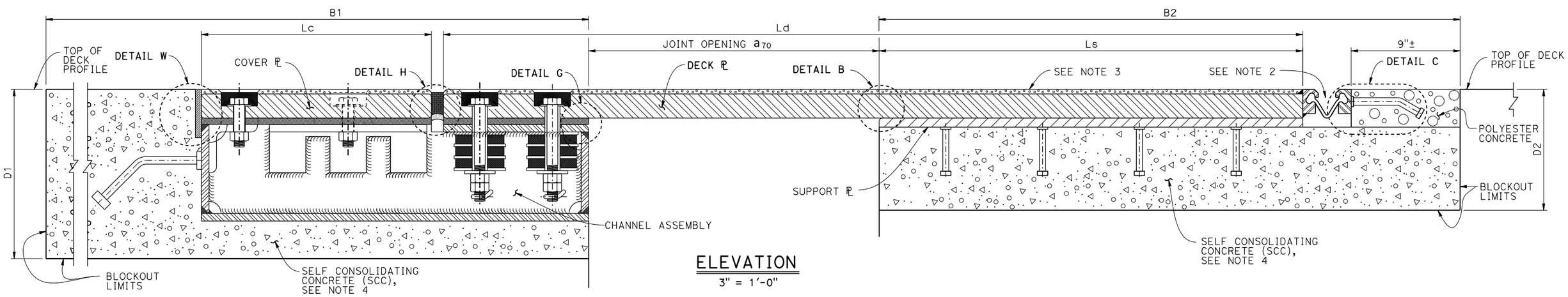

ELEVATION
3" = 1'-0"

BRIDGE STANDARD DETAILS		
xs8-070-1	July 2016	The components of the Bridge Standard Details have been prepared under the responsible charge of the Technical Owner, a registered civil engineer in the State of California
FILE NO.	APPROVAL DATE	

STATE OF CALIFORNIA DEPARTMENT OF TRANSPORTATION

DIVISION OF ENGINEERING SERVICES

BRIDGE NO.

POST MILE

SEISMIC JOINT (TYPE I, FULL CHANNEL)
TYPICAL CROSS SECTION

Refer to: http://www.dot.ca.gov/hq/esc/techpubs/manual/bridgemanuals/bridge-standard-detail-sheets/index.html

FILE => xs8-070-1.dgn
USERNAME => s136236 TIME PLOTTED => 15:13 DATE PLOTTED => 14-JUL-2016

ORIGINAL SCALE IN INCHES FOR REDUCED PLANS 0 1 2 3

UNIT:
PROJECT NUMBER & PHASE:
CONTRACT NO.:

DISREGARD PRINTS BEARING EARLIER REVISION DATES

REVISION DATES 11-23-15 7-8-16

SHEET 1 OF 9